National Sales Manager
Doug Arnold
Ph: 1.318.765.6855
Email: doug@keiproducts.com

Air-Cooled Alternators

High Efficiency / High Output / Fuel Saving Design

Applications	Warranty
Replaces 50DN Style Oil-Cooled, Externally Regulated Alternators	O.E.M 2 Years / 100,000 Miles After-Market 1 Year / 100,000 Miles

- This air cooled alternator has the ability to handle the high temperature demands of todays emission compliant diesel engines.
- Outstanding Performance
- Mass Transit / Motor Coaches / Industrial / Marine
- Fuel Savings—Low Maintenance Costs
- 77 LBS.

copyright© DBArnold53-2014

National Sales Manager
Doug Arnold
Ph: 1.318.765.6855
Email: doug@keiproducts.com

Model K50-201-K

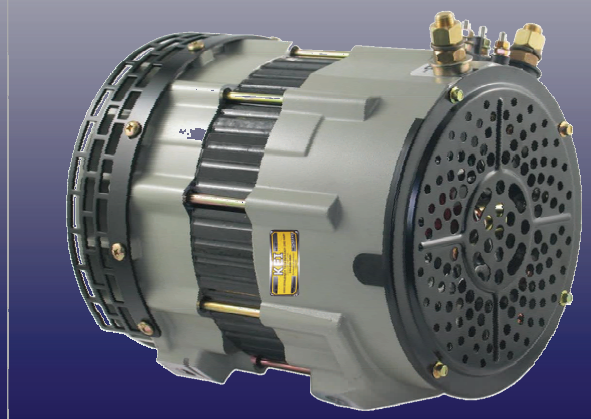

Features

- Air-Cooled Design
- 24 volt—330 Amp
- External Regulation
- Brushless
- High Output at all RPM Ranges
- Negative Ground
- R Terminal for Tachometer
- Fuel Savings
- Weight 77 LBS.
- Temperature Limits:
  - Low Temp -40° F
  - High Temp 221° F

Alternator Output

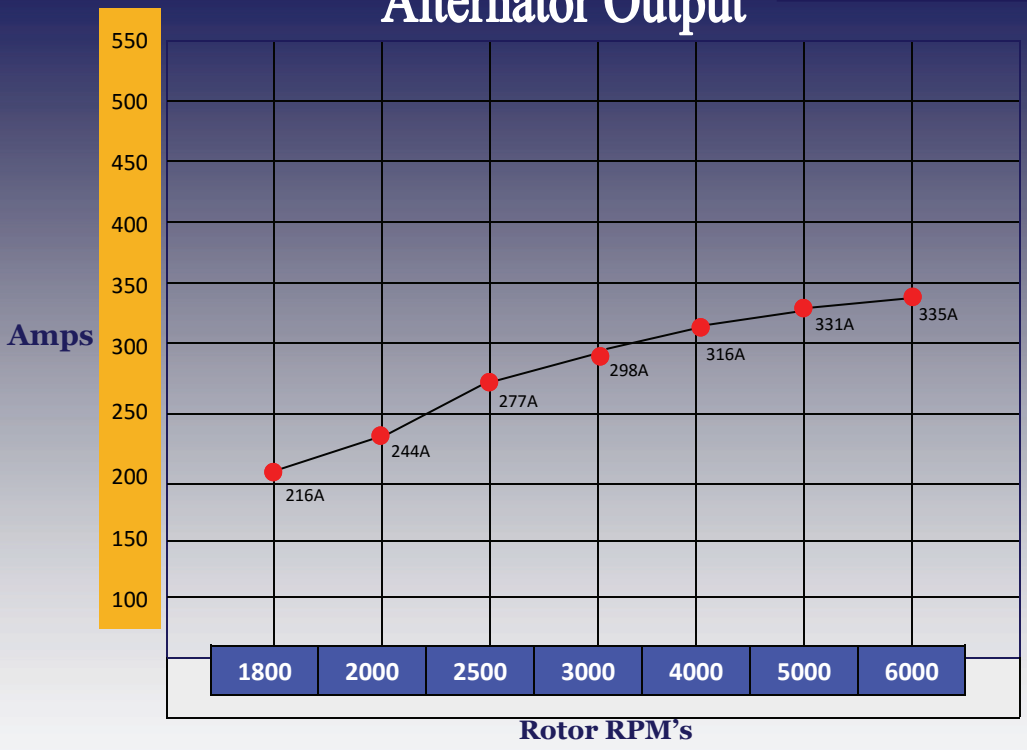

Application Guide

Replaces
50DN Style Oil-Cooled,
Externally Regulated Alternators

Warranty

O.E.M 2 Years / 100,000 Miles
After-Market 1 Year / 100,000 Miles

Mission Statement

KEI employees, with over 125 years of experience in designing, manufacturing and working with alternators, are dedicated to giving you the Product and Customer Service you Deserve!

copyright© DBArnold53-2014

National Sales Manager
Doug Arnold
Ph: 1.318.765.6855
Email: doug@keiproducts.com

Installation Guide

Model K50-201-K

NOTE:

Wire color Not Specific for any installation.

Wire being used for proper connection locations only.

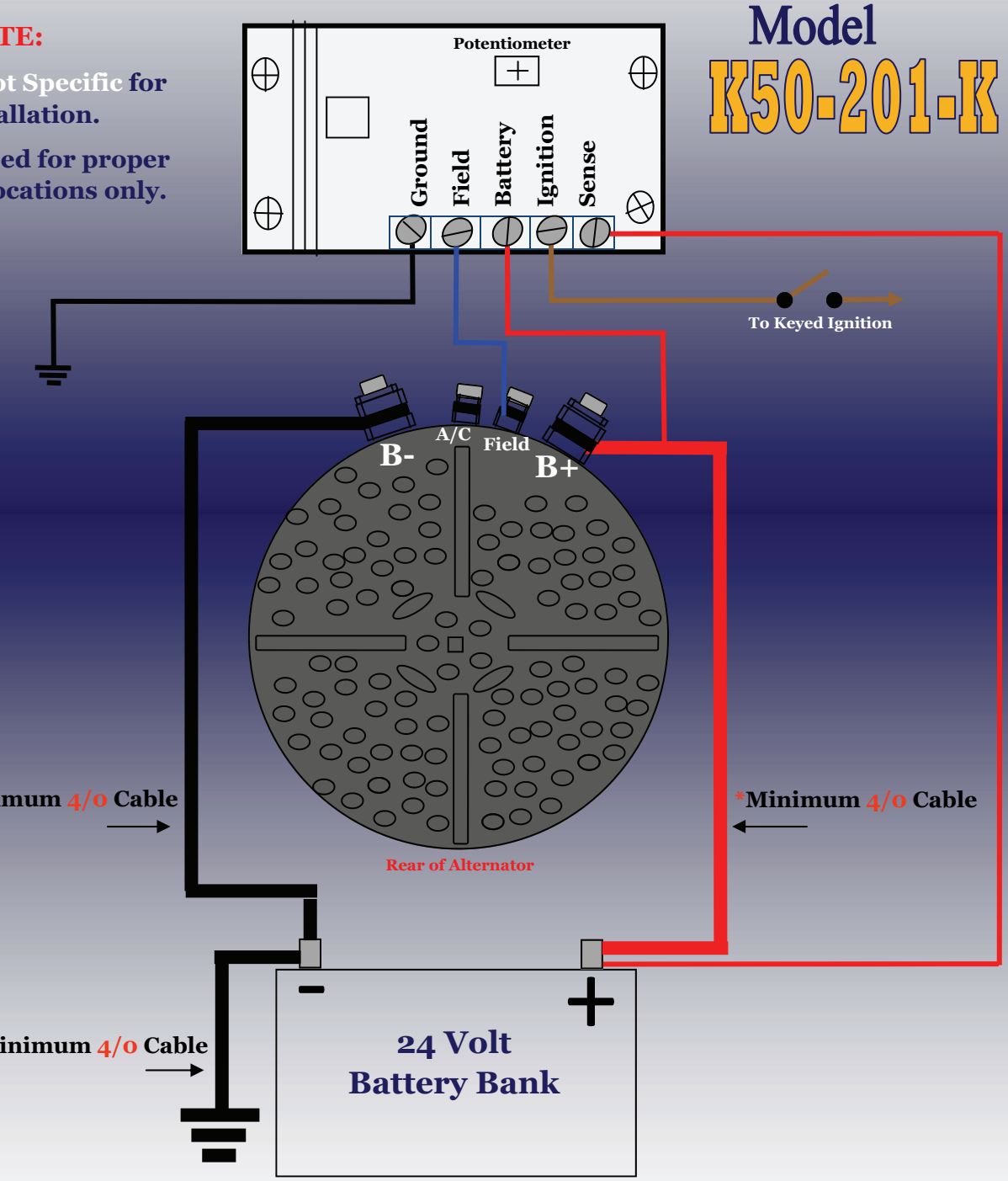

***Note**: Positive and Ground Cables from Alternator and Battery, must be identical in gauge size & upgraded to at least the minimum gauge size Cable.

copyright© DBArnold53-2014

National Sales Representative
Doug Arnold
Ph: 1.318.765.6855
Email: doug@keiproducts.com

Model K50-206-K

Features

- Air-Cooled Design
- 24 volt—450 Amp
- External Regulation
- Brushless
- High Output at all RPM Ranges
- Negative Ground
- R Terminal for Tachometer
- Fuel Savings
- Weight 77 LBS.
- Temperature Limits:
- Low Temp -40° F
- High Temp 221° F

Alternator Output

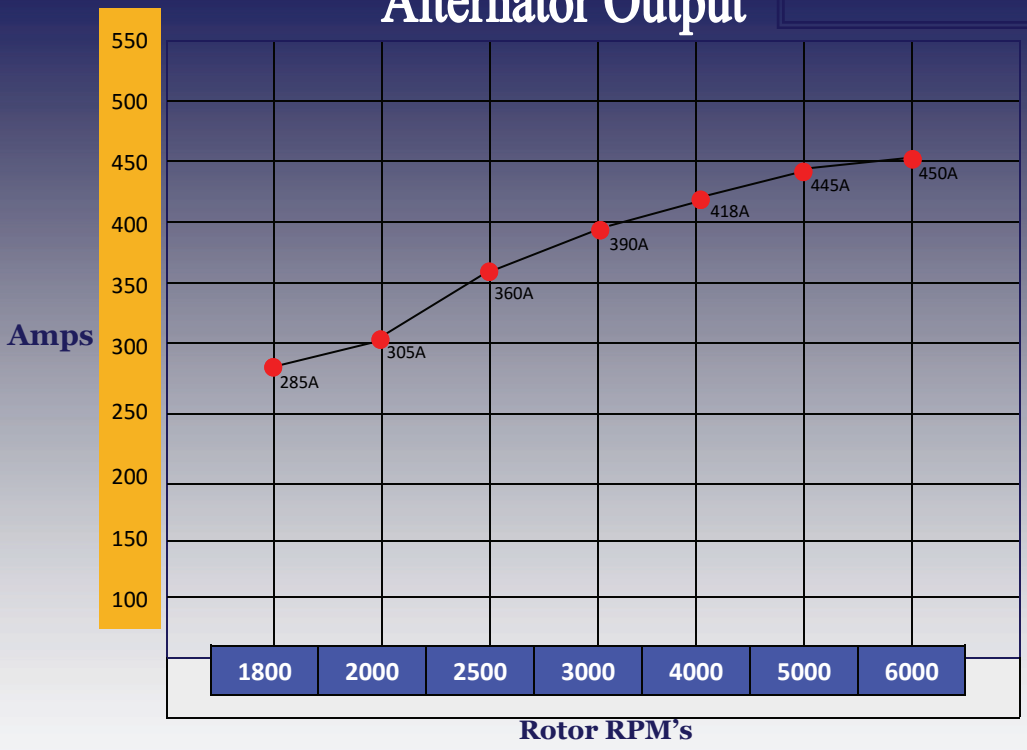

Application Guide

Replaces
50DN Style Oil-Cooled,
Externally Regulated Alternators

Warranty

O.E.M 2 Years / 100,000 Miles
After-Market 1 Year / 100,000

Mission Statement

KEI employees, with over 125 years of experience in designing, manufacturing and working with alternators, are dedicated to giving you the Product and Customer Service you Deserve!

copyright© DBArnold53-2014

National Sales Manager
Doug Arnold
Ph: 1.318.765.6855
Email: doug@keiproducts.com

Installation Guide

Model K50-206-K

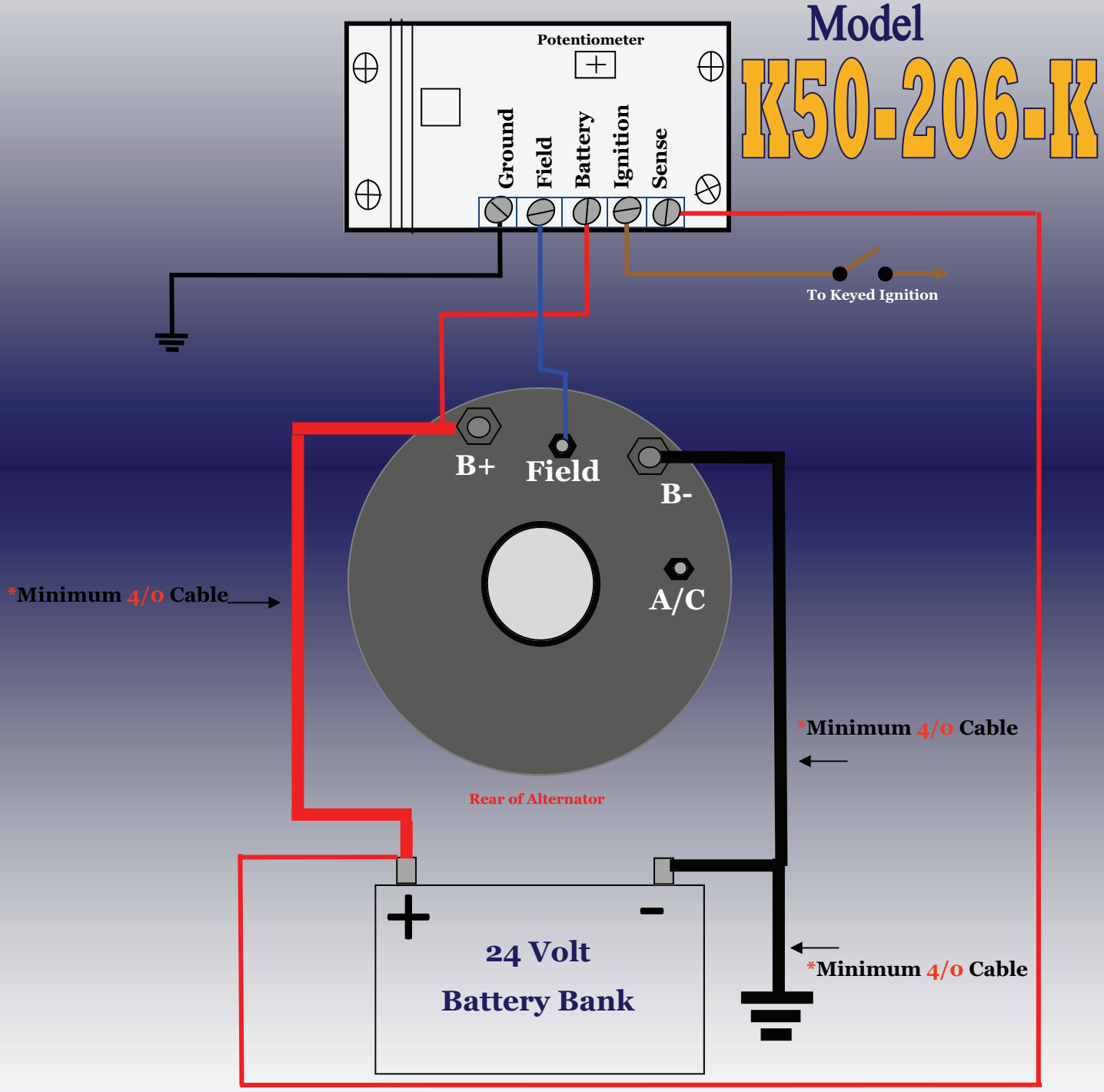

***Note**: Positive and Ground Cables from Alternator and Battery, must be identical in gauge size & upgraded to at least the minimum gauge size Cable.

copyright© DBArnold53-2014

National Sales Manager
Doug Arnold
Ph: 1.318.765.6855
Email: doug@keiproducts.com

Model K50-214-K

Features

- Air-Cooled Design
- 24 volt—550 Amp
- External Regulation
- Brushless
- High Output at all RPM Ranges
- Negative Ground
- R Terminal for Tachometer
- Fuel Savings
- Weight 77 LBS.
- Temperature Limits:
- Low Temp -40° F
- High Temp 221° F

Alternator Output

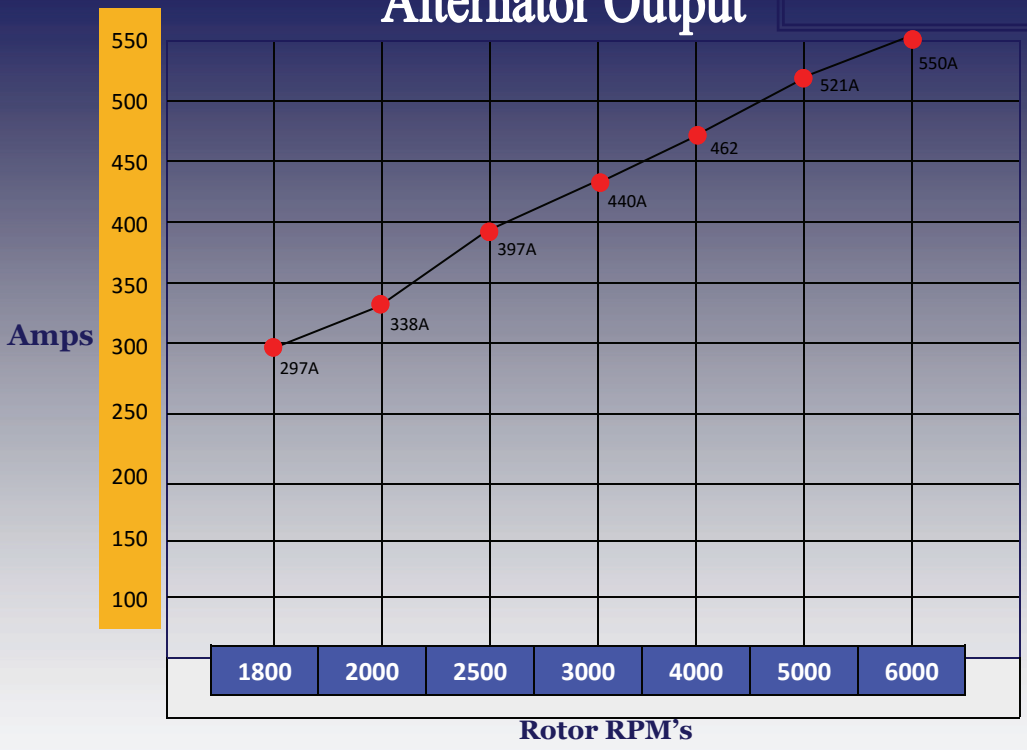

Application Guide

Replaces
50DN Style Oil-Cooled,
Externally Regulated Alternators

Warranty

O.E.M 2 Years / 100,000 Miles
After-Market 1 Year / 100,000 Miles

Mission Statement

KEI employees, with over 125 years of experience in designing, manufacturing and working with alternators, are dedicated to giving you the Product and Customer Service you Deserve!

copyright© DBArnold53-2014

National Sales Manager
Doug Arnold
Ph: 1.318.765.6855
Email: doug@keiproducts.com

Installation Guide

Model K50-214-K

NOTE:

Wire color Not Specific for any installation.

Wire being used for proper connection locations only.

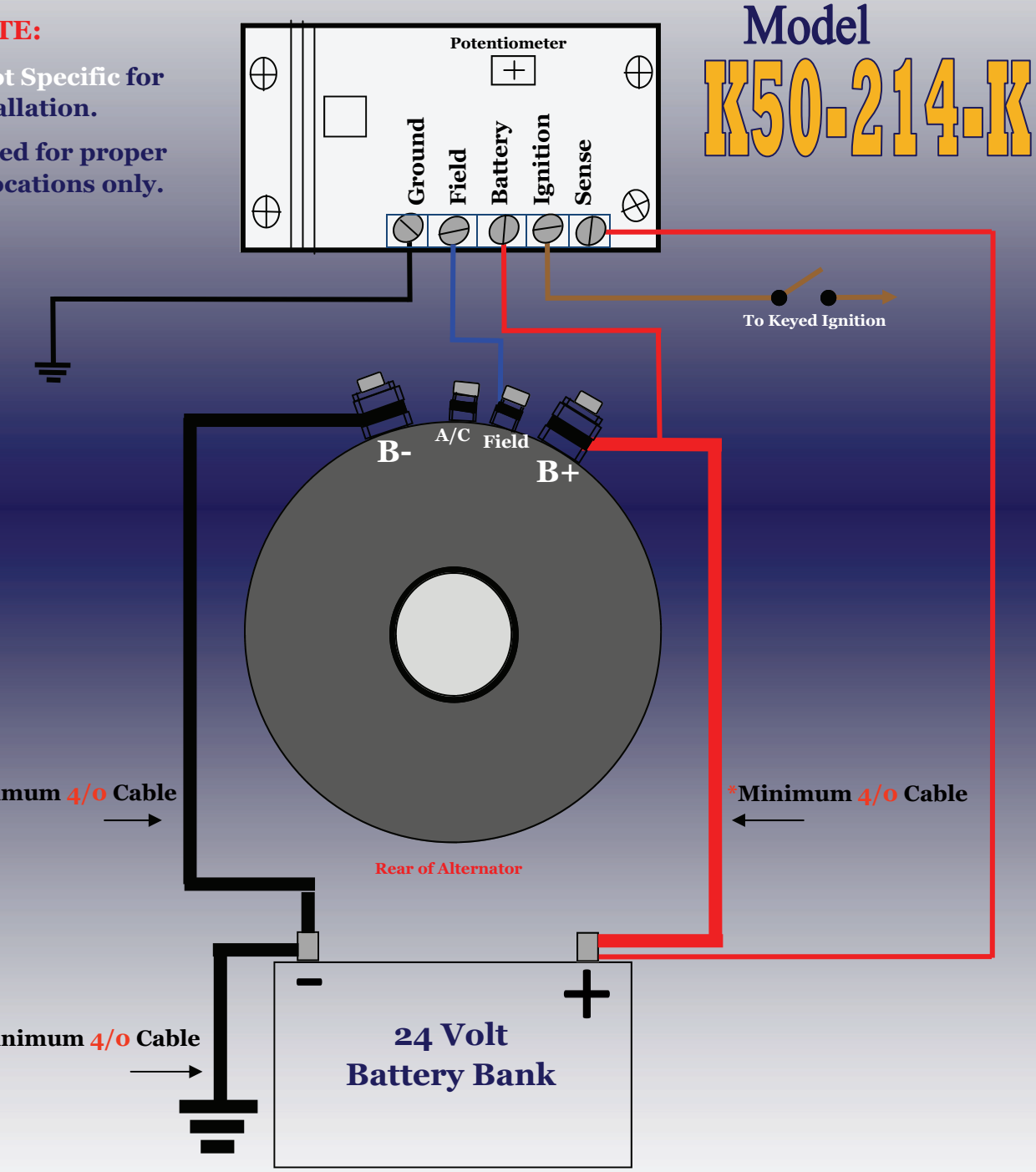

***Note**: Positive and Ground Cables from Alternator and Battery, must be identical in gauge size & upgraded to at least the minimum gauge size Cable.

copyright© DBArnold53-2014

National Sales Manager
Doug Arnold
Ph: 1.318.765.6855
Email: doug@keiproducts.com

Which K.E.I. Air-Cooled Alternator is Right for your Application?

K.E.I. Alternator Output Comparison

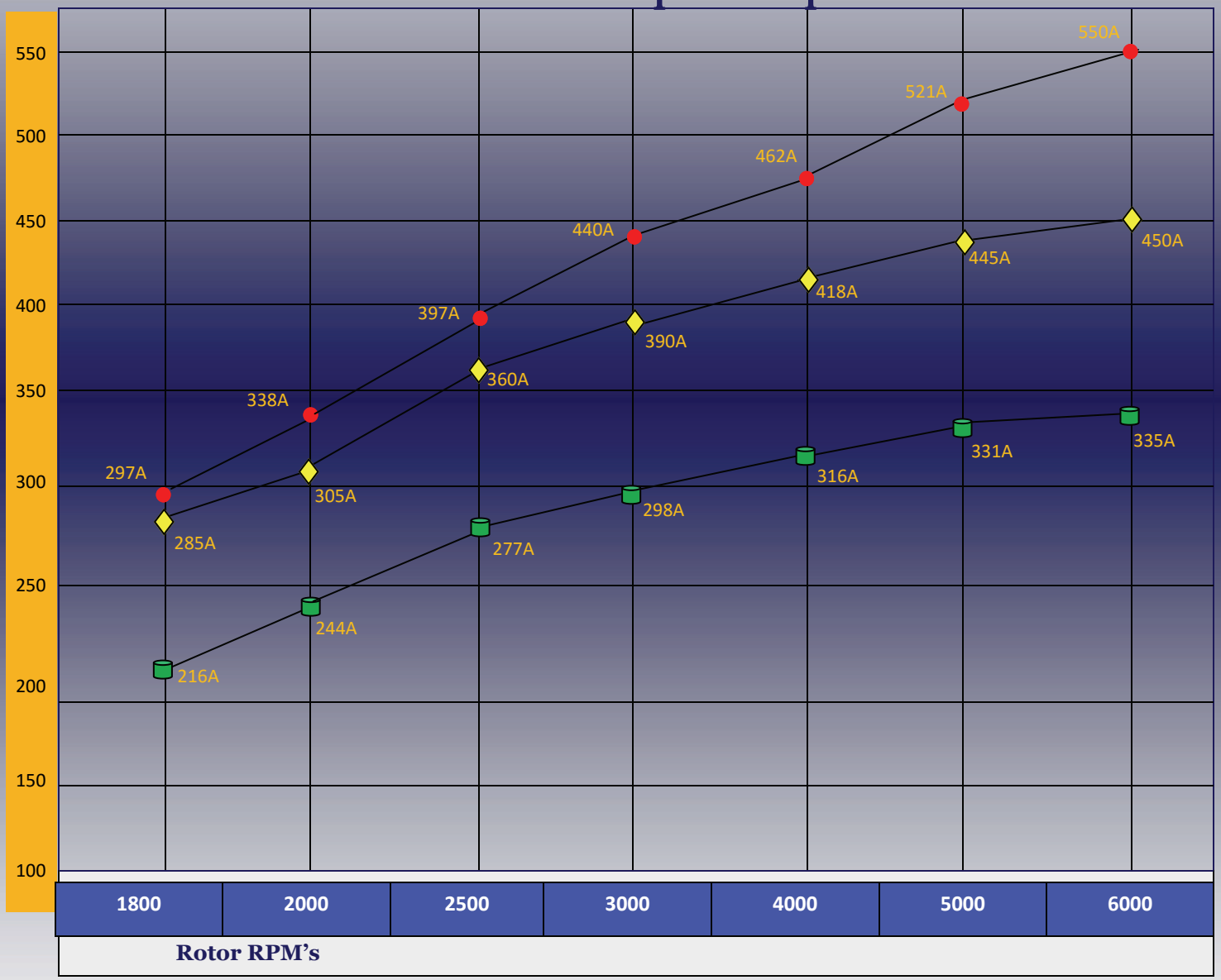

Symbol	K.E.I. Model
●	K50-214
◆	K50-206
▬	K50-201

copyright© DBArnold53-2014

K50-DA
Air-Cooled

300 Amp / 24 Volt

National Sales Manager
Doug Arnold
Ph: 1.318.765.6855
Email: doug@keiproducts.com

Replaces Delco 50 DN Oil Cooled

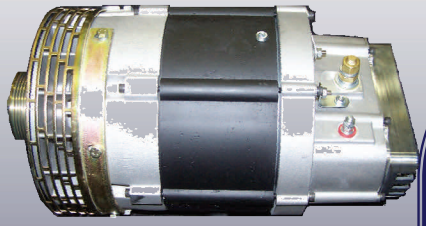

Externally Regulated

Mass Transit

Industrial

Motor Coach

Alternator Output

Alternators are tested at 26.5 Volts

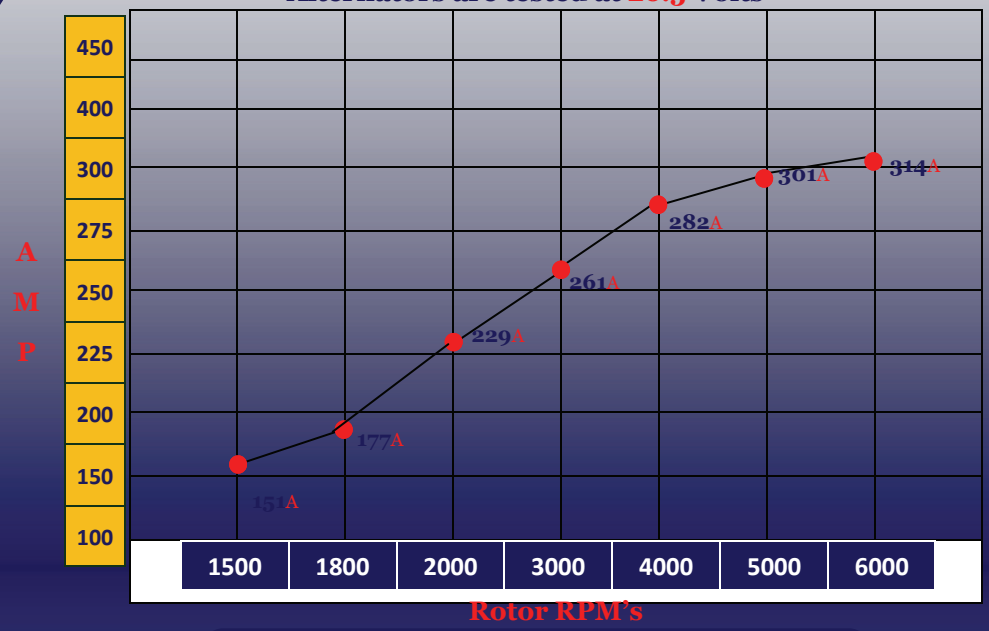

How to Determine Alternator RPM's

Crank Pulley OD divided by Alternator Pulley OD = Pulley Ratio

Pulley Ration times Engine RPM's = Alternator RPM's

Important Facts

New OEM Install Warranty : 2 Years or 200,000 Miles

New Aftermarket Install Warranty : 1 Year or 100,000 Miles

- **K50-DA** model alternators use 6 - O.E.M. 150Amp diodes which will virtually eliminate diode failure.
- **K50-DA** Rotors are precision balanced for increased bearing life.
- **K50-DA** uses SKF Double-Roller, High Temperature Bearings with a large cartridge, and double seals. This helps contribute to long bearing life.
- **K50-DA** alternators are Air-Cooled vs. Oil-Cooled which increases fuel efficiency, drastically reducing operating costs, plus eliminating Oil Leaks, which is good for the environment.
- **K50-DA** alternators are **Made in the U.S.A.**

©

National Sales Manager
Doug Arnold
Ph: 1.318.765.6855
Email: doug@keiproducts.com

Dimensional Drawing

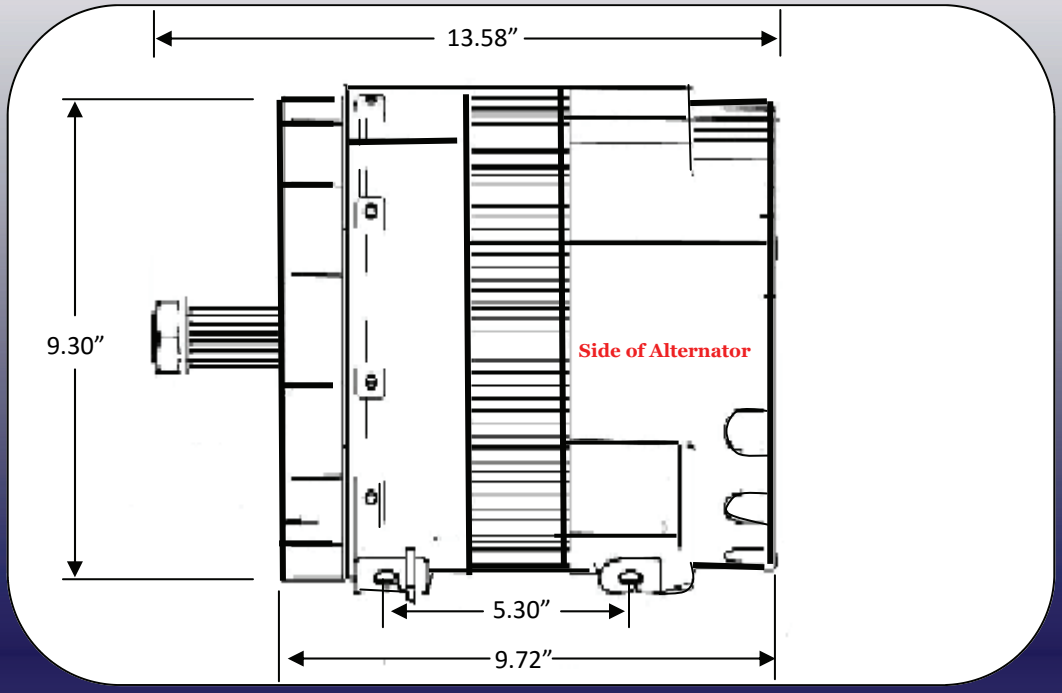

K50-214 Models K50-201

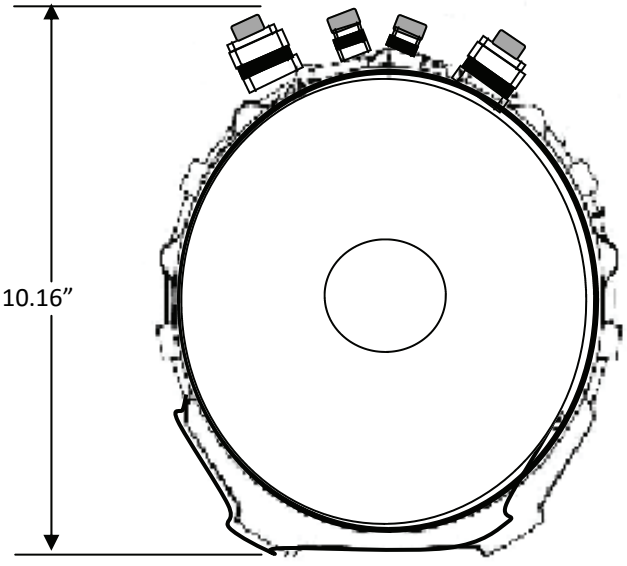

*Note: Positive and Ground Cables from Alternator and Battery, must be identical in gauge size & upgraded to at least the minimum gauge size Cable.

copyright© DBArnold53-2014

National Sales Manager
Doug Arnold
Ph: 1.318.765.6855
Email: doug@keiproducts.com

Dimensional Drawing

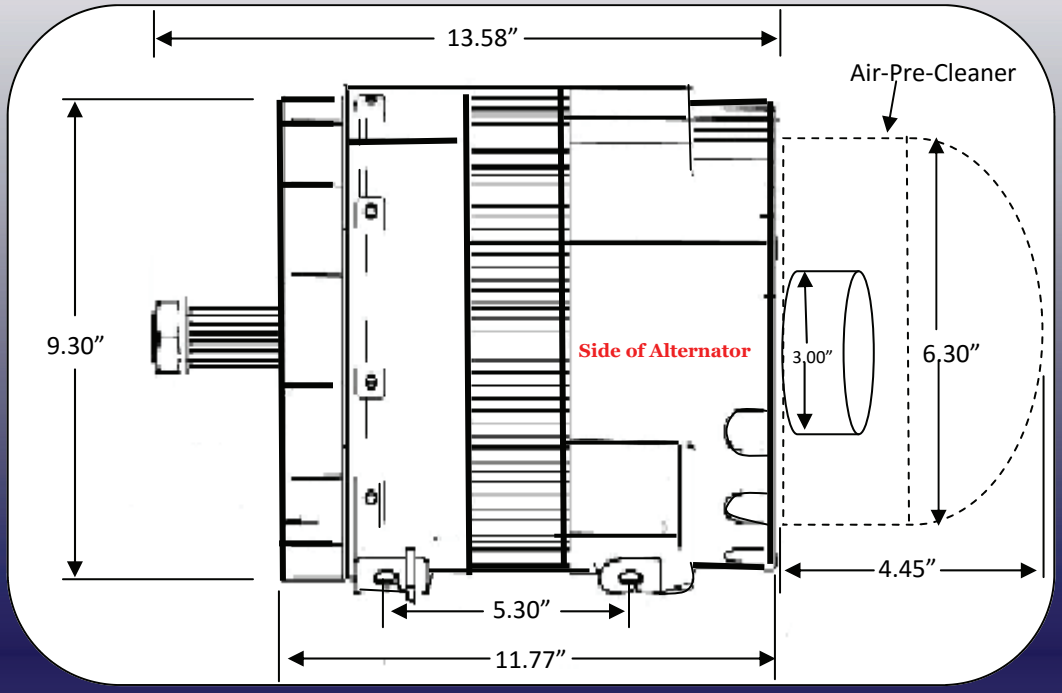

K50-535 Models

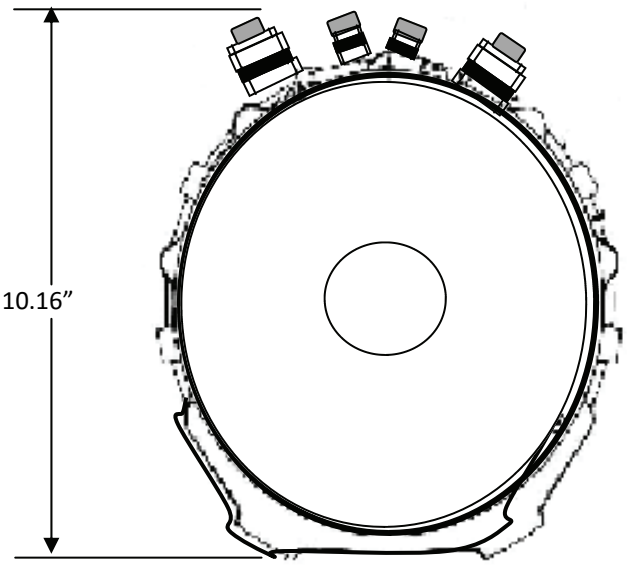

***Note**: Positive and Ground Cables from Alternator and Battery, must be identical in gauge size & upgraded to at least the minimum gauge size Cable.

copyright© DBArnold53-2014